ISABELLENHÜTTE
Innovation by Tradition

VMP-A // Au-plated
Size 2010

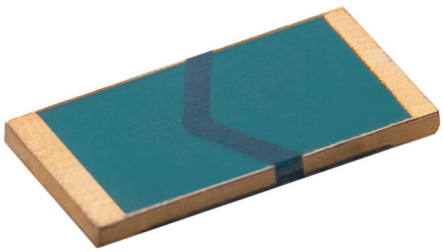

Features

- Au-plated terminals
- 2 W permanent power at 110 °C
- Constant current up to 4.5 A (100 mOhm)
- Small size (2010)
- High pulse power rating
- Excellent long-term stability
- Mounting: conductive adhesive / soldering
- RoHS 2011/65/EU compliant

RoHS

Applications

- Current sensor for power hybrid applications
- Control systems for the automotive market
- Power modules
- Frequency converters
- Switch mode power supplies

Technical data

Resistance values	**mOhm**	100 / 200
Tolerance	**%**	1 / 5
Temperature coefficient (20-60 °C)	**ppm/K**	<20
Applicable temperature range	**°C**	-55 to +170
Power rating	**W**	2
Internal heat resistance (R_{thi})	**K/W**	<30
Dielectric withstanding voltage	**V AC/DC**	200
Inductance	**nH**	<2
Stability (Nominal load) deviation after 2000h, T_K = Terminal temperature		<0.5 % (T_K=80 °C) <1.0 % (T_K=110 °C)

Ordering code

VMP - R100 - 5.0 - A

- Au-plated
- Tolerance
- Resistance value [Ohm] / „R" represents decimal point
- Type

VMP-A // Size 2010

Tape and reel information

Specification		DIN EN 60286-3
Tape width	**mm**	12
Reel size	**inch**	13
Parts per reel	**pcs**	12500
Packaging weight	**g**	481

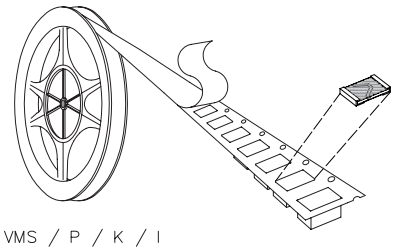

VMS / P / K / I

Specification (*parts tested at soldered condition)

Parameters	**Test conditions**	**Specified values***
Temperature Cycling	1000 cycles (-55 °C to +150 °C)	±0.5 %
Low Temperature Storage and Operation	-65 °C for 24 h	±0.2 %
Resistance to Soldering Heat	MIL-STD-202 method 210	±0.1 %
Moisture Resistance	MIL-STD-202 method 106	±0.5 %
Mechanical Shock	100 g, 6 ms, 5 pulse	±0.1 %
Vibration, High Frequency	10 Hz - 2000 Hz	±0.2 %
Operational Life	2000 h, TK max at nominal load	±1.0 %
High Temperature Exposure	2000 h / 170 °C	±1.0 %
Bias Humidity	+85 °C, 85 r.F., 10 % Bias	±0.7 %

VMP-A // Size 2010

Temperature dependence of the electrical resistance

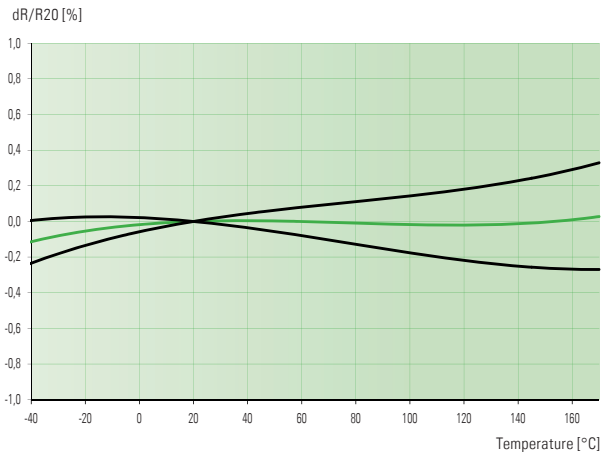

Limiting curve

Typical temperature dependence of a VMP-A resistor

Power derating curve

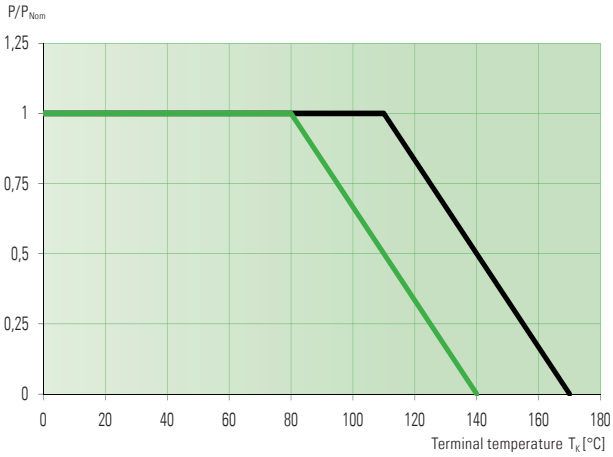

Stability < 1.0 %

Improved stability < 0.5 %

Mechanical dimensions [mm]

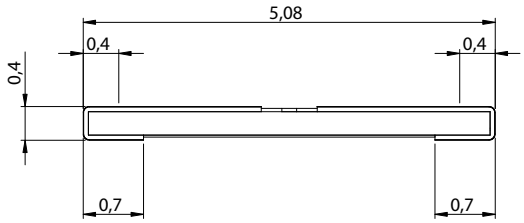

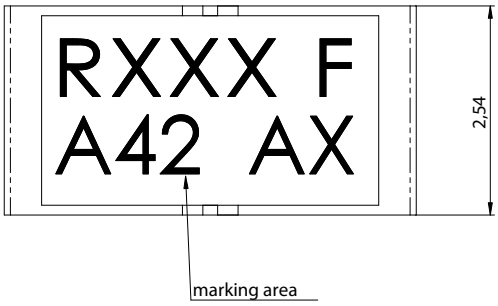

Z-DA-290b

Pcb-layout proposal (Reflow-soldering) [mm]

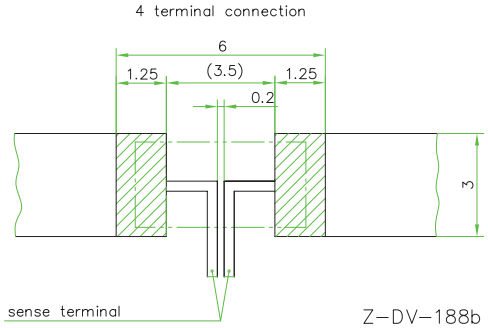

Z-DV-188b

VMP-A // Size 2010

Maximum pulse energy respectively pulse power for permanent operation

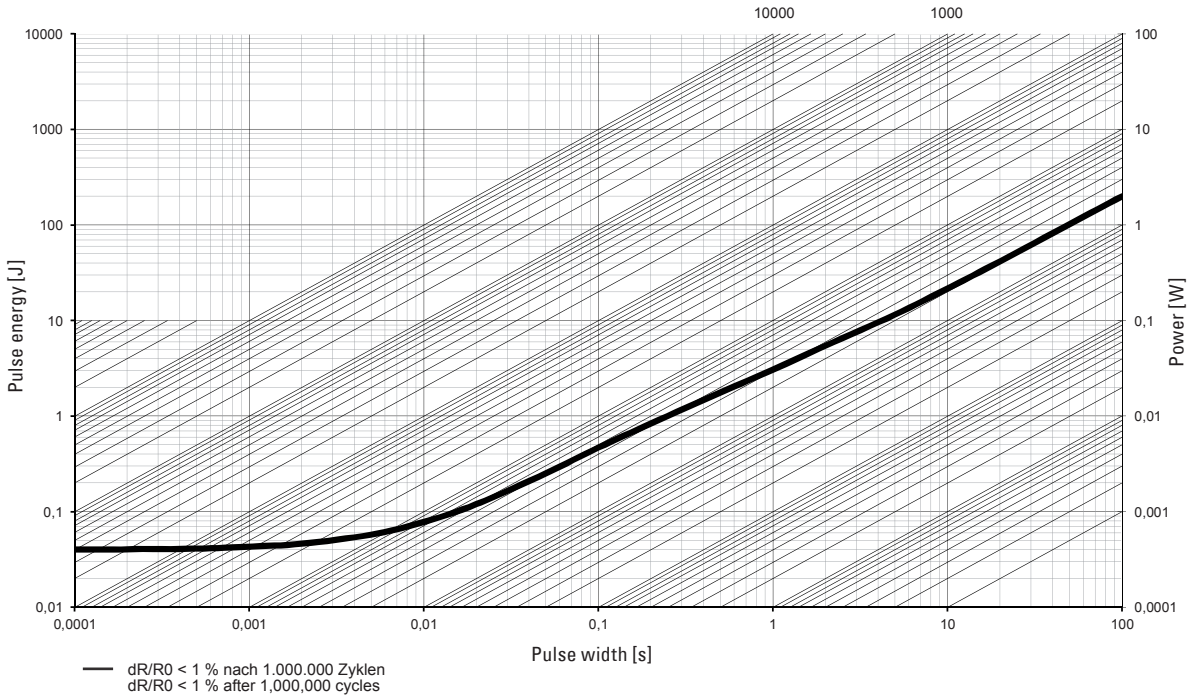

Disclaimer // All products, product specifications and data are subject to change without notice.

The product specifications do not expand or otherwise modify Isabellenhütte's terms and conditions of sale, including but not limited to, the warranty expressed therein. Isabellenhütte makes no warranty, representation or guarantee other than as set forth in its terms and conditions of sale.

Information provided in datasheets and/or specifications may vary from actual results in different applications. Any statements made by Isabellenhütte regarding the suitability of products for certain types of applications are based on its knowledge of typical requirements that are often placed on its products. It is the customer's responsibility to validate that a particular product with the properties described in the product specification is suitable for use in the application intended.

No license, express or implied, or otherwise, to any intellectual property rights is granted by this document.

Any and all liability arising out of the application or use of any product shall be as set forth in Isabellenhütte's terms and conditions of sale.